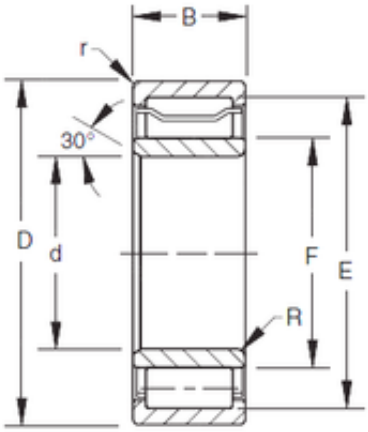


A-5232-WS Bearing 2D drawings and 3D CAD models

# Bearing A-5232-WS

**Bearing No. A-5232-WS**

| | |
|---|---|
| Bore Diameter | 160 mm |
| Outer Diameter | 268 mm |
| d | 160 mm |
| F | 190 mm |
| D | 290 mm |
| E | 268 mm |
| B | 98,425 mm |
| C | 98,425 mm |
| R | 6,4 mm |
| r | 2,5 mm |